ENVIRONMENTAL EDUCATION

Materials & Construction Resource

HART

Promoting Sustainable Transportation

In this resource document we will discuss the different types of materials that may be used in building your car and how material choice can impact performance. Keep in mind that your goal is to create a vehicle that will compete on the race track. There are only three components that you MUST utilize from the kit that you received:

- Battery Pack
- Motor
- Solar Panel

Other than these three components the rest of your car is up to you.

<u>Chassis</u>

Purpose

The car's chassis is its frame. It holds all of the main parts together.

Potential Ideas/Supplies

The following materials have been found to make good chassis for student's cars:

- Stiff foam insulation
- Brass tubing
- Soda Bottle
- Foam core
- Cardboard tube
- Corrugated Plastic
- Balsa wood
- Shoe box
- Corrugated cardboard

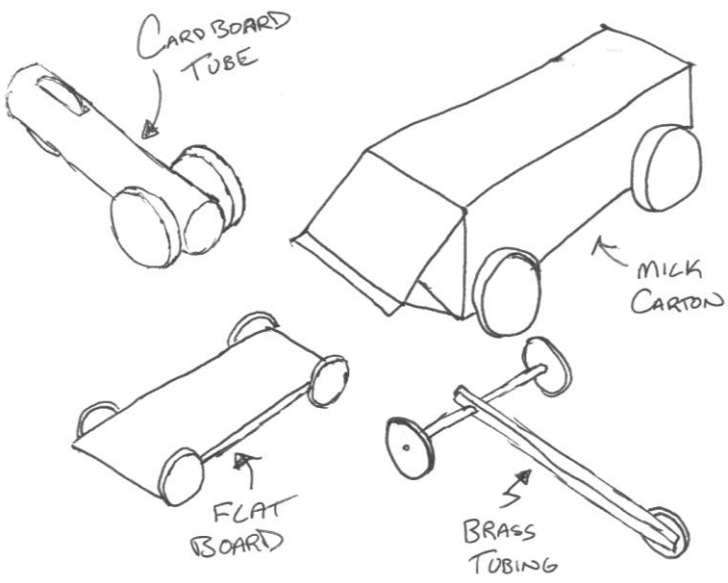

Weight vs. Stiffness

One of the considerations that you will need to make is the weight of the material you use versus its stiffness. It is easier for your motor to push a lighter car than a big heavy one. However, making your car too light could cause your car to be impacted by the wind or aerodynamic forces as your car moves

along the track (more about this later in the Body/Shell section). It is important to choose materials that can balance both of these issues.

You will want to consider the stiffness versus the strength of the material you are using. What is the difference between the two?

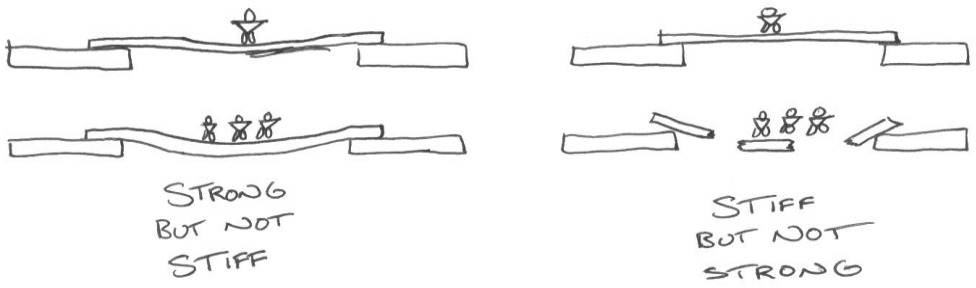

Materials that you may want to consider that have a good stiffness to weight ratio are Styrofoam, foam core, balsa wood, corrugated plastic/cardboard, and other types of plastic.

The problem that many lightweight materials have is that they are not very stiff and therefore will not support any of the other components that you need to add to your vehicle to make it go. You can, however, make some of these materials stronger just by changing their shape. Let's try an experiment!

<u>Wheels and Axels</u>

Purpose

Wheels support the chassis and allow the car to roll forward. The axels support the wheels and allow them to rotate.

Friction

Friction is the force that prevents things from sliding against each other. When building your car you will want certain parts of your car to slide easily. There are other parts that you won't want to slide at all. One of the main types of friction that you will need to think about is *Tire Traction*. When you have two surfaces that must roll along one another, like a wheel rolling along the road, friction is the force that keeps the wheels from slipping. This type of friction is commonly known as "traction". Traction is an important force to understand because without it your wheels would spin but your car wouldn't move. On the other hand, you also don't want so much traction that your car is essentially stuck to the road and the wheels won't move.

Bearings

Bearings are the part of the car that holds the axle onto the chassis of your car while still allowing it to rotate freely. This is one place where you want as little friction as possible. Below is a picture of some ideas for your bearings:

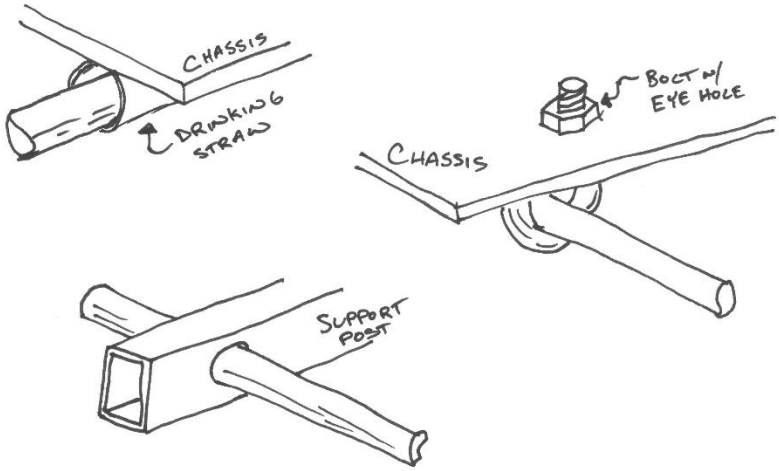

Potential Materials

Wheels: look for anything round, or things that can be cut into circular shapes

- Thin plywood
- Stiff plastic sheet
- Toy/model wheels
- Thread spool
- Wood dowels
- Balsa wood
- Styrofoam
- Tin can
- Brass rube
- Foam core
- Cardboard tubes
- Tape spool
- Plastic pipe

Traction: things that are rough or rubber-like can usually add traction

- Rubber O-rings
- Cloth tape
- Rubber bands
- Silicone
- Rubber sheet
- Caulking

Axle: the axle must be stiff, narrow and round

- Nails
- Brass rod
- Brass tubing
- Coat-hanger

Bearing: support for the axle that allows it to spin freely

- Screw eyes
- Hard material w/ a hole drilled into it
- Straw
- Eyebolts
- Brackets with screw holes pre-drilled
- Brass tubing
- Holes drilled directly into the chassis

Body/Shell

Purpose

The body or shell on a real car has several purposes. It protects the passengers from wind and rain, it provides added safety in the event of a crash, and it improves the look of the car. For our purposes the function of the body is to hold our solar panel, have a place for our cargo (soda can), and reduce the force of air on the car as it moves.

Potential Ideas/Supplies

- Poster Board
- Stiff insulation foam
- Cardboard
- Plastic Sheeting
- Foam core

Aerodynamics

To see how much force the air can have on a moving object, you can try some simple experiments. While mom or dad are driving, hold your hand out of the window. Now hold your hand flat so you palm is facing into the wind. After a few seconds change the orientation of your hand so that it is flat with your palm facing the ground. How does the air feel when you change your hand into different positions?

Take a look at different types of cars and imagine how the air would flow around them. Fast cars are shaped so that, when moving quickly, they can cut more easily through the air. While cars that aren't necessarily designed as sports cars may have a boxier look to them. You may have also seen tractor trailers with large wind deflectors on top of the cab. These are designed so that the air moves smoothly over the top of the truck and reduces the air's impact on the truck. You can take a look at some of the pictures below to see how air moves around differently shaped cars.

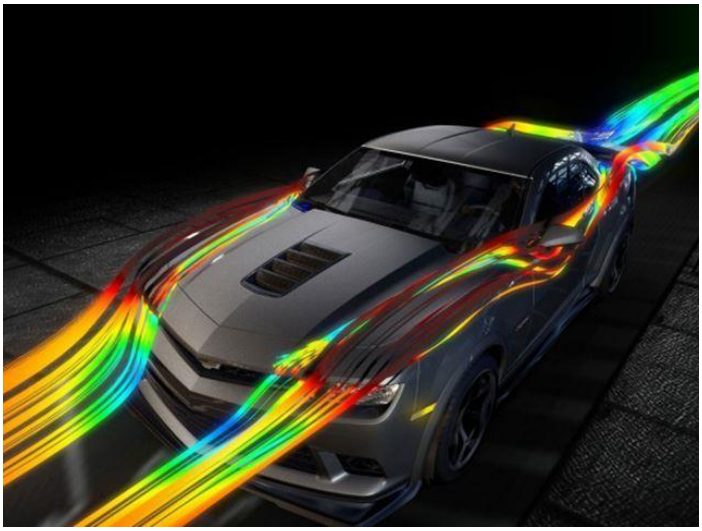

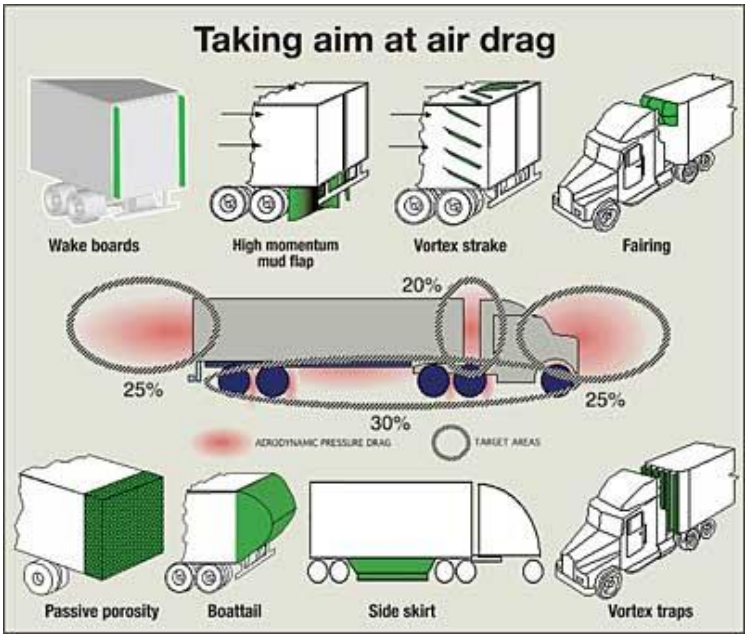

Now that you have some ideas on how to construct the different parts that will make up your Junior Solar Sprints vehicle you can start to piece these parts together to build your car. Remember to continue to test your vehicle as you build to ensure that everything is working the way you would like it to, it is easier to fix something prior to the entire car being finished. Look for other great HART assistance documents such as:

1. Introduction Resource
2. Gear Ratio and Wheel Size Assistance
3. Solar Power: How does it work?

In addition to HART's Junior Solar Sprints programming these documents will help you understand the different factors that impact the success of your Junior Solar Sprints race car.

Below are a few experiments that you can perform to help you understand how to build your car more effectively. These experiments are great additions to your progress journal so be sure to add pictures, answers to the questions provided, and explanations on what you did and what you found.

Experiment #1: Shape of an Object

Step 1 – Take two books, or other material, that are the same height and place them about six (6) inches apart

Step 2 – Place something light in the middle of the paper. I.e., a coin, paperclip, etc.

Question: What happens to the paper? *Journal Photo Opportunity*

Answer:

Step 3 – Now we are going to make the paper stronger just by changing its shape. Take the same piece of paper and fold it into thirds, making a "u" (see drawing below) and place it back on the books.

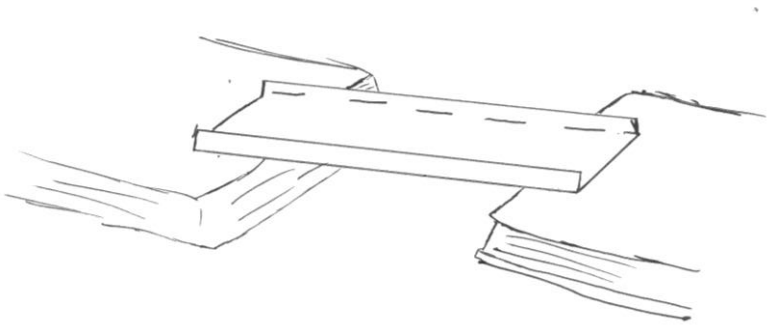

Step 4 – Now place the same light object in the center of the paper.

Question: Does anything change? What happens? *Journal Photo Opportunity*

Answer:

Step 5 – Experiment with other shapes to see how stiff they are.

By changing the shape of a material we can manipulate a normally flexible material to become stiffer.

Experiment #2 – Orientation

In this experiment we are going to see how the orientation of an object can impact its stiffness.

Step 1 – Take any ordinary ruler

Step 2 – Try to bend it in both directions, as depicted below. *Journal Photo Opportunity*

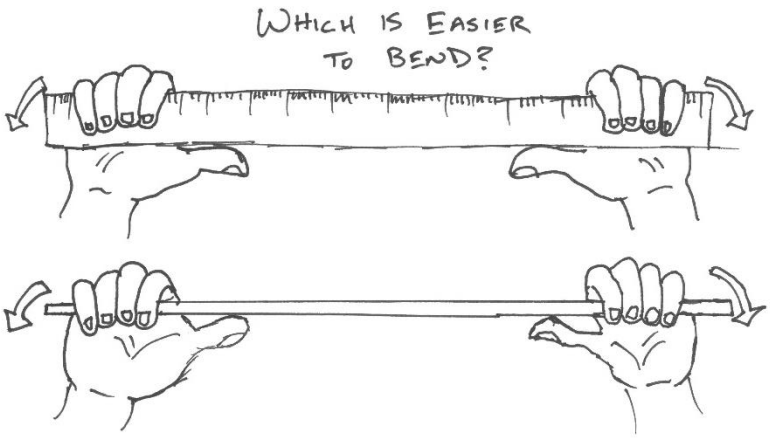

Question: Which orientation was easier to bend? Why do you think the one orientation is stronger?

Answer:

Now think about ways that you might be able to utilize this information to help you in the construction of your vehicle.

Experiment #3 – Weight Distribution & Traction

For this experiment, you will need at least the base of a car with gears, wheels, and a battery pack attached. Make sure that your car is “rear-wheel drive”, which means that the rear wheels are pushing the car forward.

Step 1 – Place some amount of weight in the center of your car until the wheels begin to slip. *Note: You will have to utilize bare wheels for this WITHOUT the rubber bands or this experiment will not work.

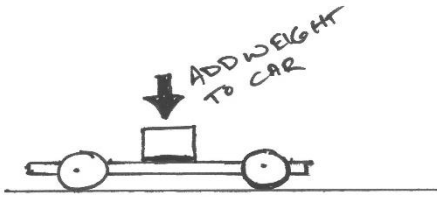

Question: Why do the wheels slip? What are some things you might be able to do to stop them from slipping? *Journal Photo Opportunity*

Answer:

Step 2 – Move the weight to the rear of the vehicle so that it is on top of the wheels that move the car.

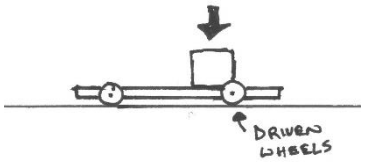

Question: What happens? Why does this happen? *Journal Photo Opportunity*

Answer:

Explanation: All the force utilized to move your car is coming from the rear of the car because those are the wheels that are attempting to move the car forward. Moving the weight so that it is just over those wheels increases the traction that the vehicle has because the additional weight is causing more friction between the wheels and the surface your vehicle is moving on.

Question: When you moved the weight over the axel, traction increased. What do you think would happen to your vehicle if you moved the weight past the axle toward the back of the car?

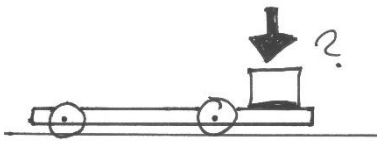

Answer:

Experiment #4 – Wheel Alignment

Wheel alignment has to do with the position of each of your wheels relative to the position of the other wheels. So in a sense we are talking about all of the wheels lining up.

Question: Why do you think having your wheels in alignment is important? What happens to your car if they are not properly aligned?

Answer: *Try and answer before starting the experiment*.

Supplies needed: Two (2) axels, four (4) wheels, two (2) bearings, and a chassis.

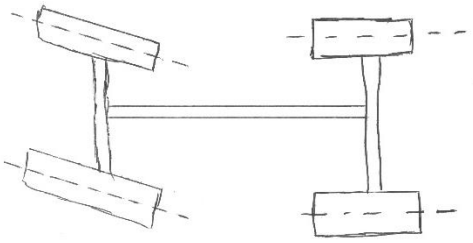

Step 1 – Assemble your car using tape so that you can easily take it apart after you are finished. Now attach one set of wheels so that they are straight and follow this up by attaching the other so that they are crooked (sort of like the drawing to the left).

Step 2 – Give your car a push.

Question: Does your car move smoothly across the floor? Does it move in a straight line? Explain why you think that your car is acting the way that it is. *Journal Photo Opportunity*

Answer:

Step 3 – Align the wheels so that they are parallel to one another. I would recommend utilizing a tool called a *square* to ensure that they are indeed straight.

Step 4 – Now give your car a push again.

Question: What happens this time? How does your car move?

Answer: